SW1100TSN SWITCH

CONTACT：17265076798

100/1000BASE-T1 SWITCH

SW1100SN SWITCH

FEATURE:

- 5ch 100Base-T1-T1
- 1ch 1000Base-T1
- 1ch 100/1000Base-T RJ45
- TSN/AVB (802.1Qav/bv/at/ci/bu)
- IEEE 1722ATVP
- 802.1AS-2020/ IEEE1588
- 802.1AS-2020 gPTP (BC)
- 802.1Q VLAN
- AVB support
- Metal Shell and Status LED
- MATEnet
- Molex Mini50 power port

SW1100 TSN SWITCH

USER MANUAL

100BASE-T1 TSN SWITCH

SW1100TSN Time-Sensitive Networking AVB Switch

7-port 100base-t1 automotive Ethernet switch, 5 channels of 100BASE-T1 and 1 channel of 1000BASE-T1 TE MATEnet, with 1 channel 100/1000BASE-T standard Ethernet (RJ45 interface). It enables nanosecond-level time synchronization, multi-channel switching for automotive Ethernet, bypass data acquisition, and monitoring functions. The switch supports TSN/AVB protocols, boundary clocks, and gPTP clock bridging, complying with the IEEE 802.1AS-2020 standard. Its clock Domain ID ranges from 0 to 255. Additionally, it fully supports the AVB protocol suite, enabling comprehensive audio/video bridging capabilities.

Architecture:

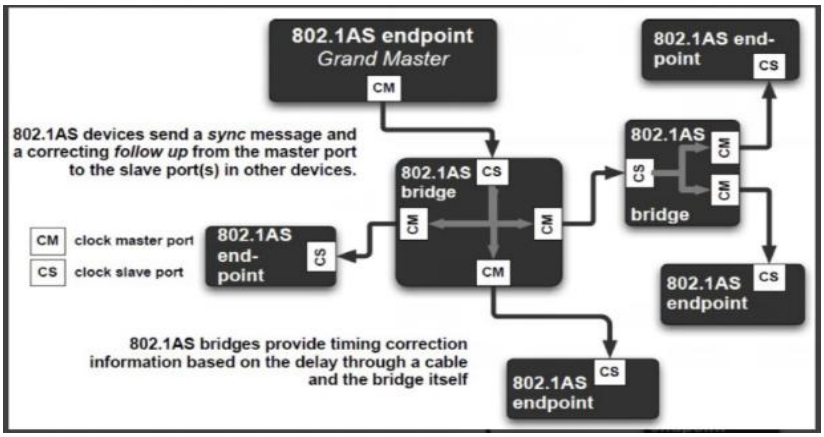

Feature:

- Power supply: 7V~36V，temperature:-40℃ to +105℃
- Widely used in the construction of traditional fuel and pure electric vehicle TSN system, as well as vehicle radar, camera, ADAS and other testing. Industrial control and aerospace。
- The static current power consumption is about 2W, and the full load current power consumption is about 5W.
- Overvoltage protection, anti reverse connection
- Size: 206x 91 x 32mm

OPERATING

1 PRODUCT PRINCIPLE

1.1 Product principle and architecture

In addition to supporting the TSN protocol stack and clock synchronization functions such as 802.1AS/1588/PTP, the SW1100TSN also implements a complete AVB audio and video bridge function, supporting the complete AVB protocol suite.

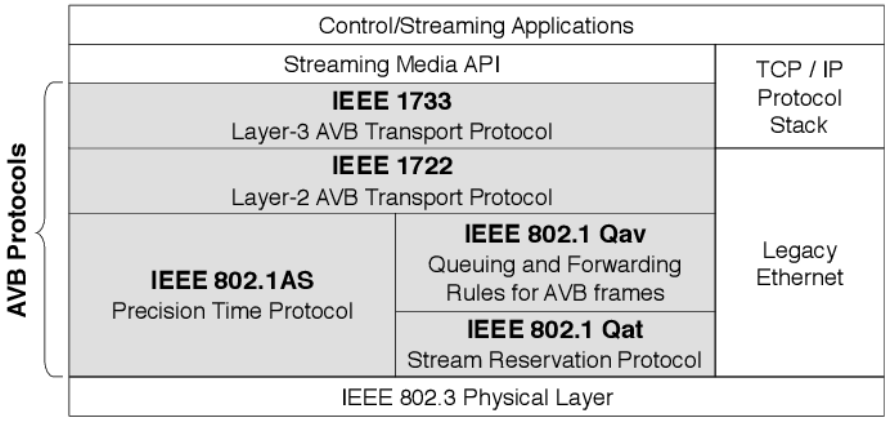

Meanwhile, SW1100TSN is also a fully functional network switch that supports basic network application functions and applications above the transport layer. It supports the transmission of upper-layer applications using protocols such as TCP/UDP/ICMP/SOMEIP. The following network system architectures are supported:

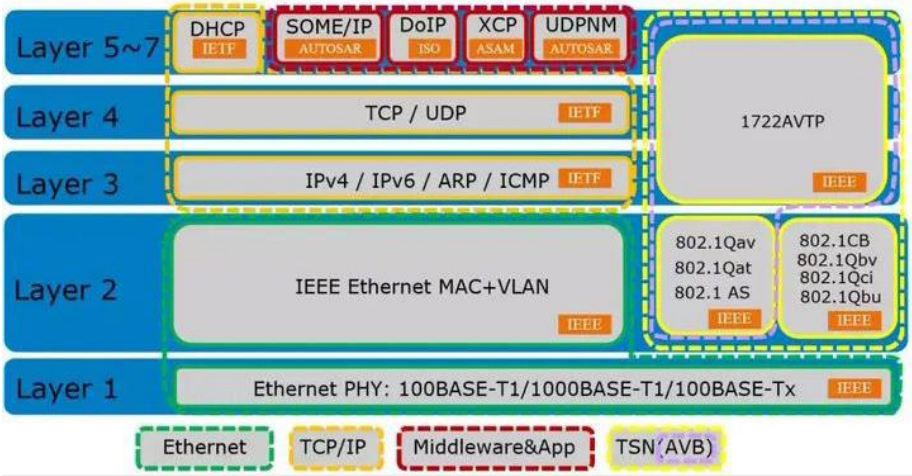

1.2 Product usage and configuration

The master-slave configuration of the five 100BASE-T1 ports (Port1~Port5) is set through the network port configuration tool. Port6 is a 1000BASE-T1 port, and its master-slave configuration is selected by the 8th bit of the dip switch. Please ensure that the other bits of the DIP switch remain in the OFF state. The network port configuration tool manages the function and clock scheme configuration of the switch, such as channel master-slave configuration, clock configuration, VLAN and domain configuration, etc. The device interface layout is as follows:

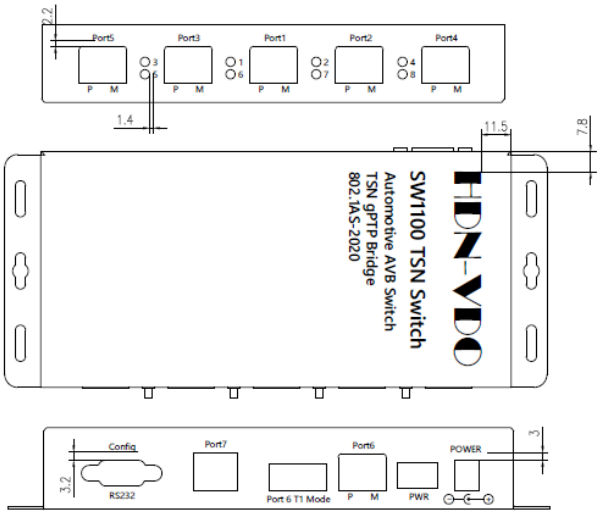

GUI Config Tool:

- 100BASE-T1 Master/Slave Mode
- Port VLAN configuration PVID configuration
- Port gPTP Clock Master/Slave Configuration
- gPTP Domain ID Configuration
- MAC Address Configuration
- IP Address Configuration
- Other configuration requirements

SW1100TSN Config GUI

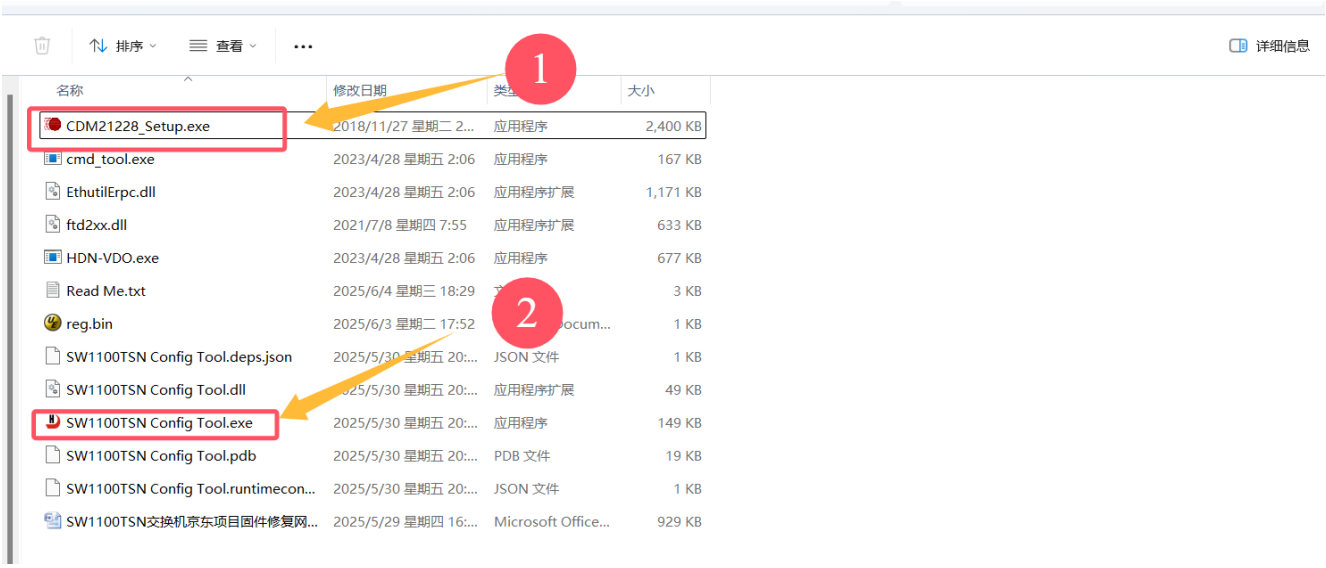

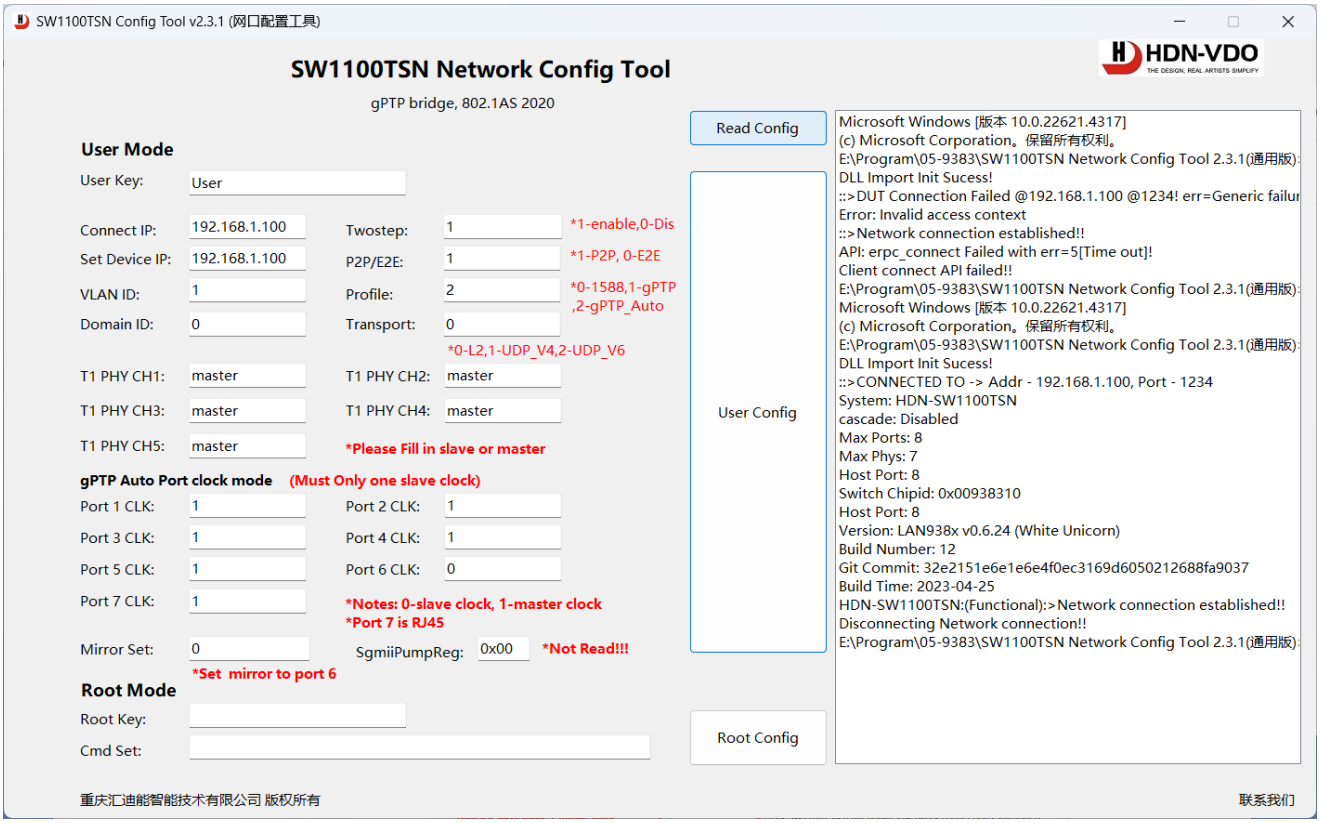

SW1100TSN series harness interface definition

Device end:

Name	Model	definition	Manufacturer
Tyco MATEnet Port 1 P M	2304372-1	1- N 2- P	Tyco

Wire harness end：

Name	Model	definition	Manufacturer
Tyco MATEnet 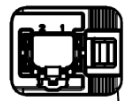 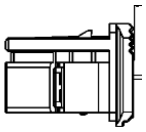	2302510-9	1- N 2- P	Tyco

reference：

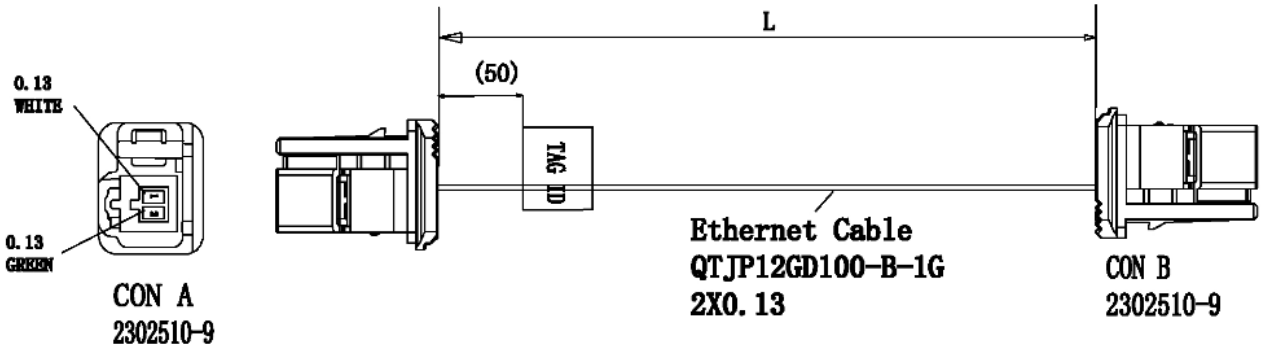

SW1100TSN series power interface definition

Device end:

Name	Model	definition	Manufacturer
Molex mini50 Base	34793-0040	1- +12V 2- +12V 3- GND 4- GND	Molex

Wire harness end:

Name	Model	definition	Manufacturer
Molex mini50 Plug	34791-0040	1- +12V 2- +12V 3- GND 4- GND	Molex
Cable Core	43030-0001	-	Molex

As below:

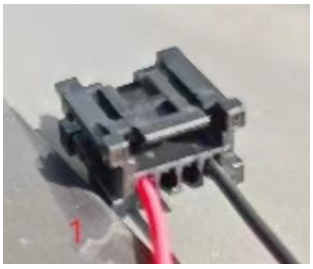

2 SOLUTIONS

2.1 Case of building gPTP clock bridge experiment

The Automotive Ethernet TSN test network aims to build the necessary network architecture for precise time synchronization and simulation of vehicle internal controller modules for accurate network timing. It requires one grand clock node, one or more slave clock nodes, one onboard Ethernet TSN switch, and one configured computer. Among them, the ancestor clock and slave clock nodes are simulated and implemented using Linux computers (network cards must support IEEE1588) and vehicle mounted Ethernet converters. Of course, each computer and converter combination can be replaced with actual LiDAR or other slave clock nodes. The system architecture is as follows:

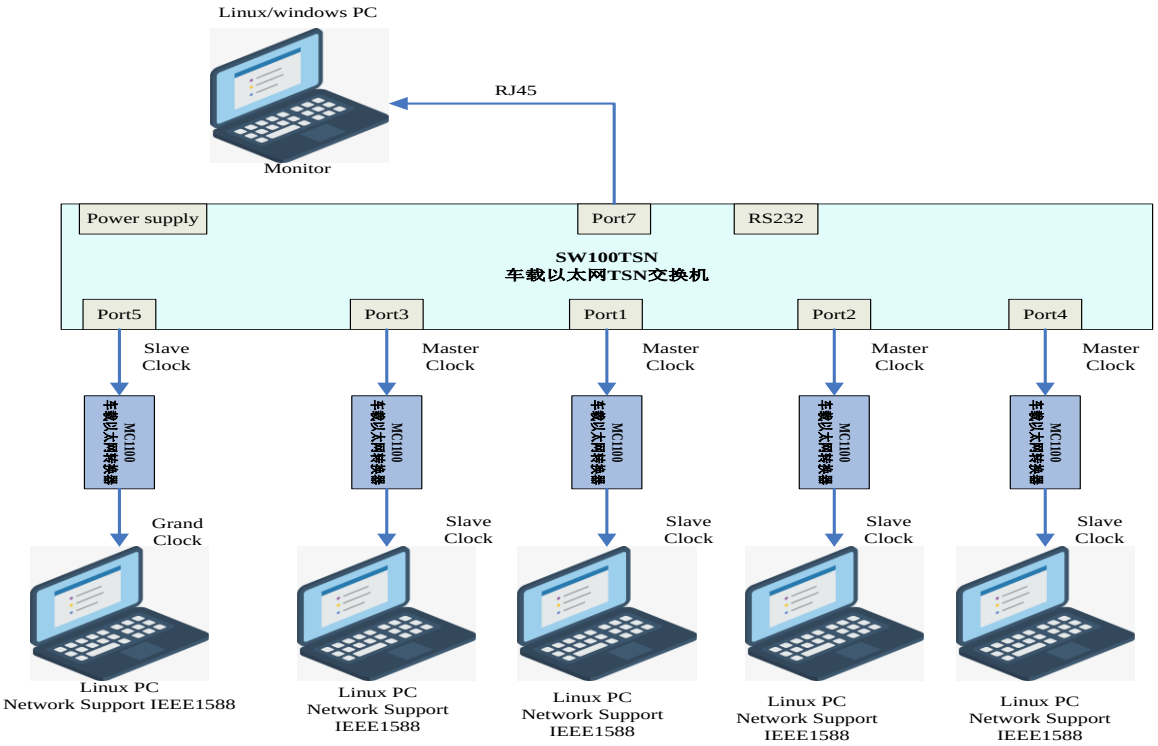

2.2 Case of gPTP clock bridge for automotive LiDAR

Build a simplified laser radar bridging scheme as follows, supporting gPTP time synchronization and achieving data transmission and precise synchronization between the main control module and the laser radar. Other similar applications can also refer to this solution, such as high-definition cameras in vehicles, millimeter wave radar, industrial robots, avionics system clock synchronization, and so on.

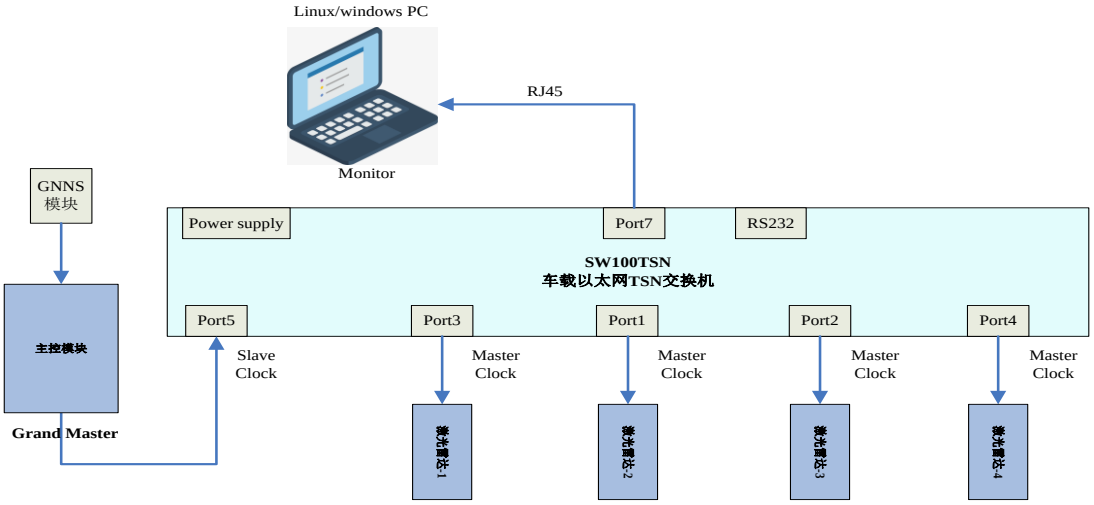

2.3 A Scheme for Integrating Automotive LiDAR into Industrial PCs

The following presents a simplified scheme for integrating LiDAR into industrial PCs, which supports gPTP time synchronization and enables data transmission and precise synchronization between the industrial PC and the LiDAR.

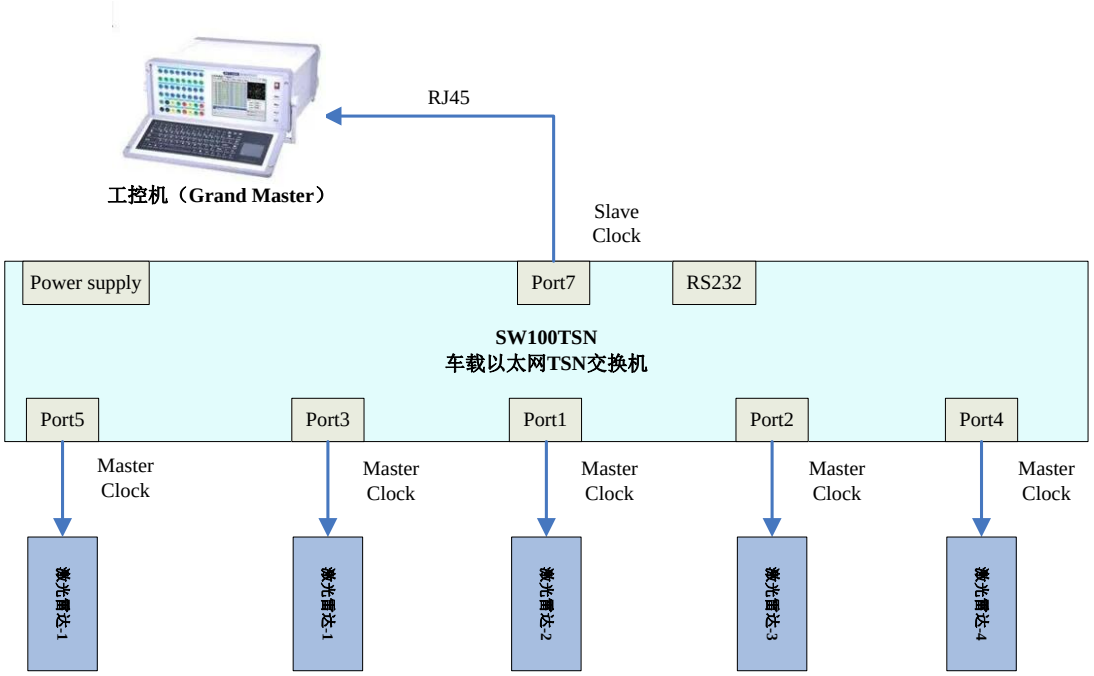

3 BRIEF INSTRUCTIONS FOR USE

Connect one of the TRX-N and TRX-P lines of the SW100 TSN vehicle Ethernet switch to the corresponding connection point of the tested target. Then, configure the mode of the port as Master or Slave as needed. (If the connected target device is Master, then this port is set as Slave) 。 Add a 12V power supply to the equipment and connect the computer and the Ethernet switch using network cable.

If the target device is correctly connected to the port, and the device and the corresponding channel are configured as master and slave respectively (i.e., the connection is correct), then the indicator light of the corresponding channel will light up. At the same time, it also indicates that the network of this channel has established a data link. Thus, you can use the Ethernet software on the computer to monitor and collect the data of the tested target.

That is, once the indicator light is normal, you can use the Ethernet software on the computer to monitor and collect the data of the tested target.

3.1 Switch Data Link Test

For example, the tested device DUT1 is a 100BASE-T1 Master (IP: 192.168.1.155), and the tested device DUT2 is a 100BASE-T1 Slave (IP: 192.168.1.188). Connect the two devices to CH1 and CH2 of SW1100TSN respectively. CH1 is configured to connect to DUT1 as a Slave, and CH2 is configured to connect to DUT2 as a Master. After powering on, the indicator lights corresponding to the CH1 and CH2 channels light up, indicating that a connection has been established and data communication can be performed.

Then, connect SW100 to the computer using an Ethernet cable, configure the IP of the computer to be in the same network segment as the two devices (IP: 192.168.1.122), and open the Wireshark software. You can then see the communication data between DUT1 and DUT2.Wireshark shows as follows:

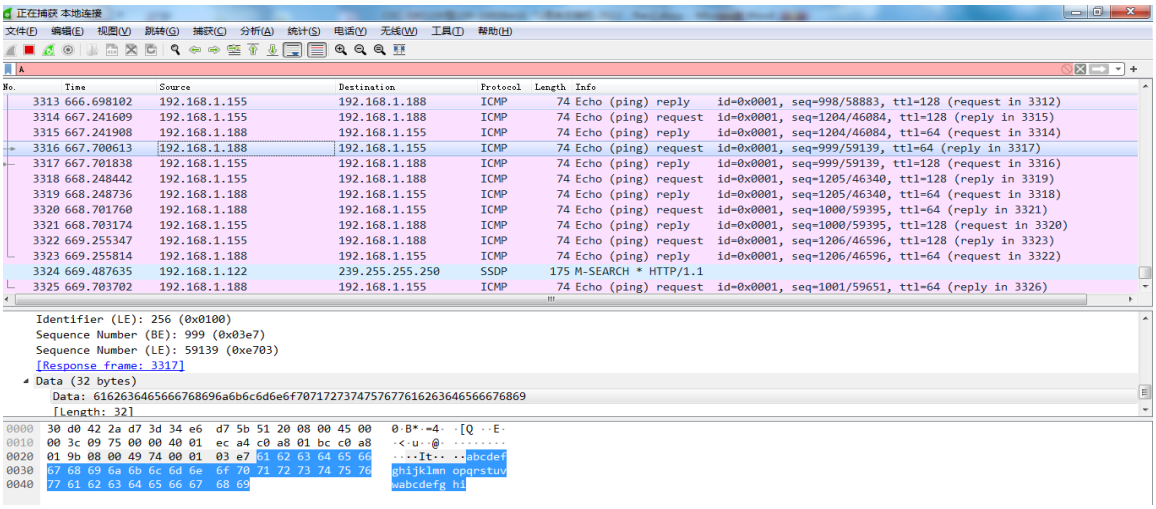

3.2 Clock Synchronization Test

If the tested device DUT1 is the master clock, connect it to the slave clock port of SW1100TSN. This way, the precise clock of DUT1 can be synchronized to the SW1100TSN switch, which will obtain the precise time and synchronize with DUT1. You can view the following messages on Wireshark:

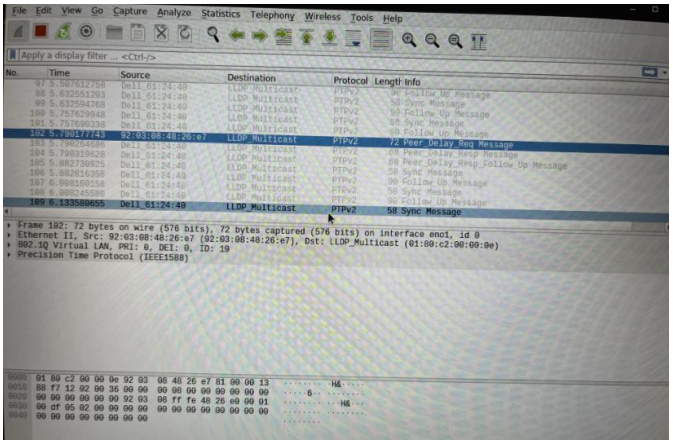

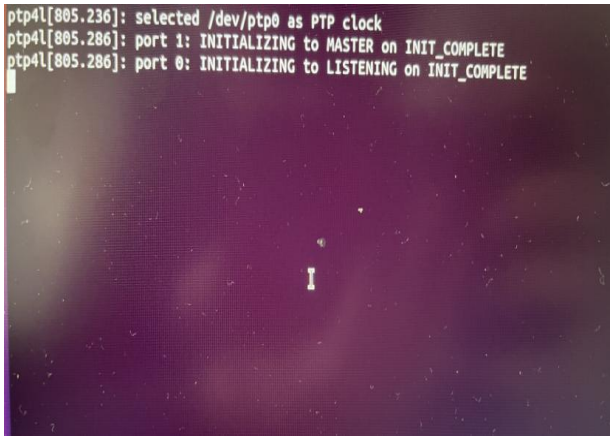

If the tested device DUT2 is from a clock node, it should be connected to the main clock port of SW1100TSN. In this way, SW1100TSN can provide precise timing for DUT2. The switch will then pass the precise time obtained from the root clock to DUT2, and DUT2 will be synchronized with the system clock. You can view the following messages on Wireshark:

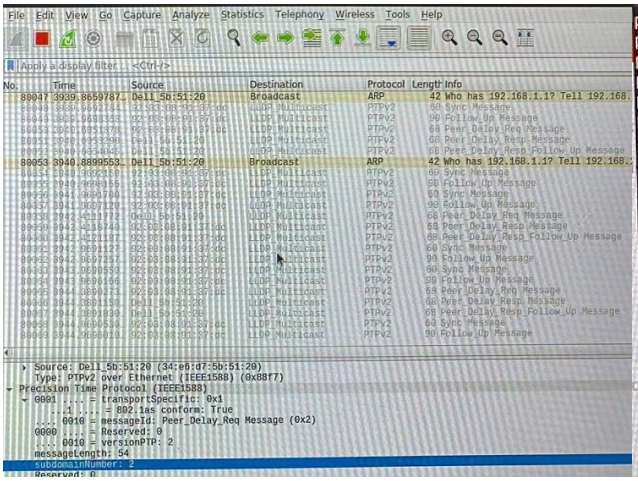

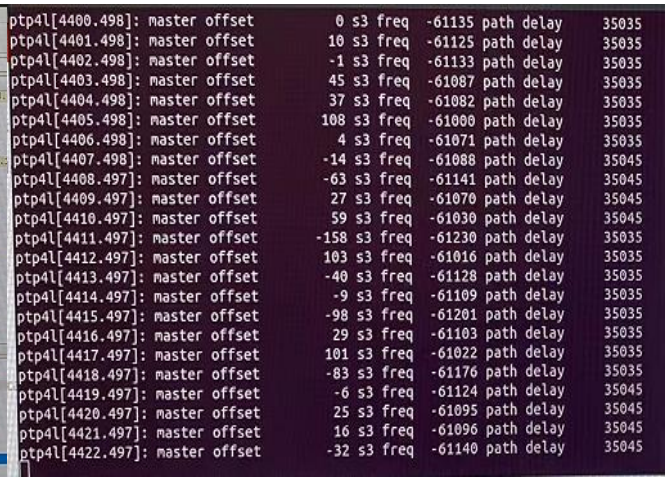

Of course, you can also use the data collection software and Ethernet transceiver testing tools we provide:

Wireshark Tool:

https://wwm.lanzouh.com/iK3eQtjvfti Password:d5te

Data send tool:

https://wwm.lanzouh.com/i3bNTtjv7hi Password:4pd7

Testing tool:

https://wwm.lanzouo.com/b01psw5vi Password:bn3z

Attachment 1: Introduction to gPTP

gPTP (Generalized Precision Time Protocol) is the IEEE 802.1AS protocol, which is an extension of the IEEE 1588 protocol. It provides global precise time services for TSN to achieve the flow synchronization function within the TSN standard group.

The purpose of this protocol is to enable all nodes in the AVB network to synchronize with a common reference time. The requirement is that the time error between two terminal nodes separated by no more than 7 AVB nodes should not exceed 500ns. The general logic of this protocol is to use the BMCA algorithm to select the best node in the network as the master clock (or a pre-determined one) and establish a master clock tree; then, using the peer path delay measurement mechanism, calculate the error between the master and slave clock ports for synchronization.

gPTP defines that the device operates in the MAC sublayer of the OSI model (belonging to the data link layer), which is only one step away from the physical layer, thus reducing the uncertainty of delay caused by protocol stack caching and shortening the transmission time of packets. This protocol stipulates two types of device: Time-aware-end Station and Time-aware Bridge.

Time-aware-end Station: Can be understood as the working node of gPTP, which can serve as the master clock or the slave clock.

Time-aware Bridge: A type of bridge that can only serve as the master clock. Meanwhile, in TSN switches, it has at most one slave clock port, and it can also be synchronized with an external master clock. gPTP messages will have a processing time after entering the bridge, called the residence time. The protocol requires that this bridge must have the ability to measure the residence time.

Both of these two devices have local clocks. They are measured by the oscillation period of the crystal oscillator and are counted by the internal hardware counter of the device.

In the network, the network port that sends the time synchronization message is called the master port, and the port that receives the time synchronization message is called the slave port.

The master clock is the time reference of the entire system, which requires higher time accuracy and the ability to be time-synchronized by clocks with higher precision, such as atomic clocks and satellites. The allocation of the master clock can be divided into dynamic allocation and static allocation. For vehicles, the network composition is generally stable and can adopt static pre-allocation to determine the master clock. For systems with dynamically changing network components, the BMCA algorithm (Best Master Clock Algorithm) is generally used for allocation. However, in gPTP Automotive, BMCA is prohibited, and a definite master clock and slave clock relationship positioning should be established.

gPTP Packet Classification

In the gPTP protocol, packets are classified into two attributes: message class and message type. The specific classification of the message class is as follows:

• Event-type Packet (Event Massage): This type of packet is characterized by the device sampling the hardware counter when receiving or sending event-type packets. It combines the oscillation period count value, clock oscillation frequency, and reference time to generate a timestamp.

• General-type Packet (General Massage): When the device receives or sends this type of packet, it does not trigger the sampling of the hardware counter and does not generate a timestamp.

The classification of message types and their corresponding values are as follows:

Message type corresponding to message level and value

Massage Type	Message Class	Value
Sync	Event	0x0
Pdelay_Req	Event	0x2
Pdelay_Resp	Event	0x3
Announce	General	0xB
Signaling	General	0xC
Follow_UP	General	0x8
Pdelay_Resp_Follow_UP	General	0xA

It is necessary to specifically note that

• The Announce message is enabled in the master clock allocation and contains the calculated time of the optimal master clock

• The Signaling message is mainly used to transmit information, requests or control instructions

Header definition

gPTP can be regarded as a specific configuration file of PTP, so the headers here can be directly used as those of PTP:

Table 10-4—PTP message header

Bits 8	7	6	5	4	3	2	1	Octets	Offset
transportSpecific				messageType				1	0
reserved				versionPTP				1	1
messageLength								2	2
domainNumber								1	4
reserved								1	5
flags								2	6
correctionField								8	8
reserved								4	16
sourcePortIdentity								10	20
sequenceId								2	30
control								1	32
logMessageInterval								1	33

The meanings of each field in the PTP header definition are as follows:

字段	含义	作用	取值
transportSpecific	传输协议	标识所用的传输规范	0x1
messageType	报文类型	标识报文类型	参考报文类型表格
versionPTP	PTP 协议版本	标识对应的 IEEE 1588 版本	0x2
messageLength	报文长度	标识整个 PTP 的报头长度	/
domainNumber	域编号	标识该报文所属的时钟域	/
flags	标志域	对特殊报文的特殊取值有不同作用	参考 IEEE 802.1AS Table10-6
correctionField	修正域	各报文都有，用于 Sync 报文和补偿传输时延	0x0
sourcePortIdentity	源端口标识符	标识发送该报文的时钟 ID 和端口号	/
sequenceId	序列号	标识消息的序列号	/
control	控制域	/	0x5
logMessageInterval	录入消息周期	PTP 消息的发送时间	不同报文类型的取值不同

Attachment 2: Linux and PTP-related Commands

Install ethtool: sudo apt-get install ethtool

Check if the network card supports PTP hardware clock: ethtool –T eno1

Install Linux PTP: sudo apt-get install linuxptp

Execute ptp4l from the clock: ptp4l –H –m –i eno1 -s -2 –P

Execute ptp4l as the master clock: ptp4l –H –m –i eno1 -2 –P

Execute ptp4l with configuration file: ptp4l –H –m –i eno1 –f xxx_profile.cfg

Attachment 3:
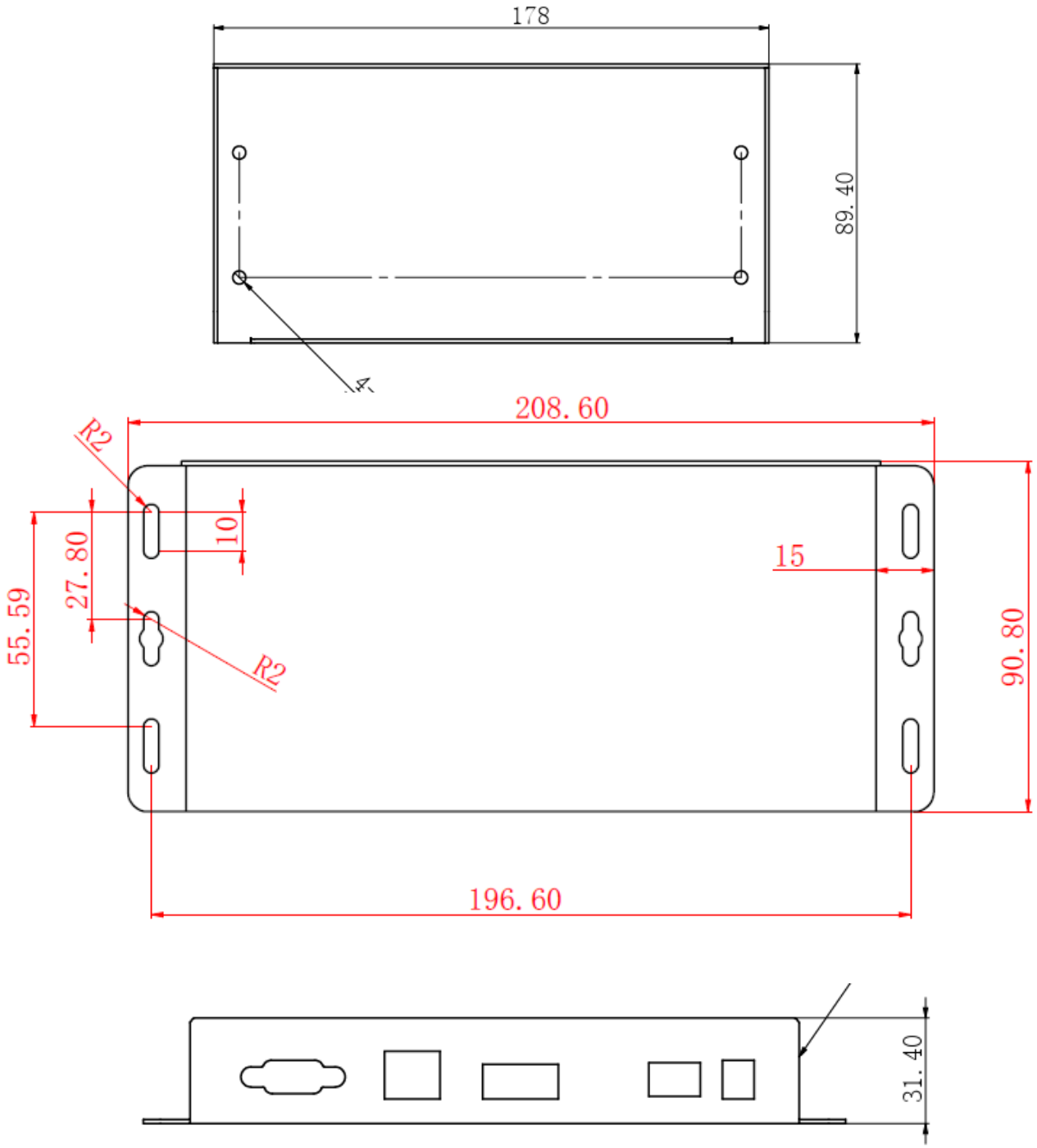
SW1100TSN Size